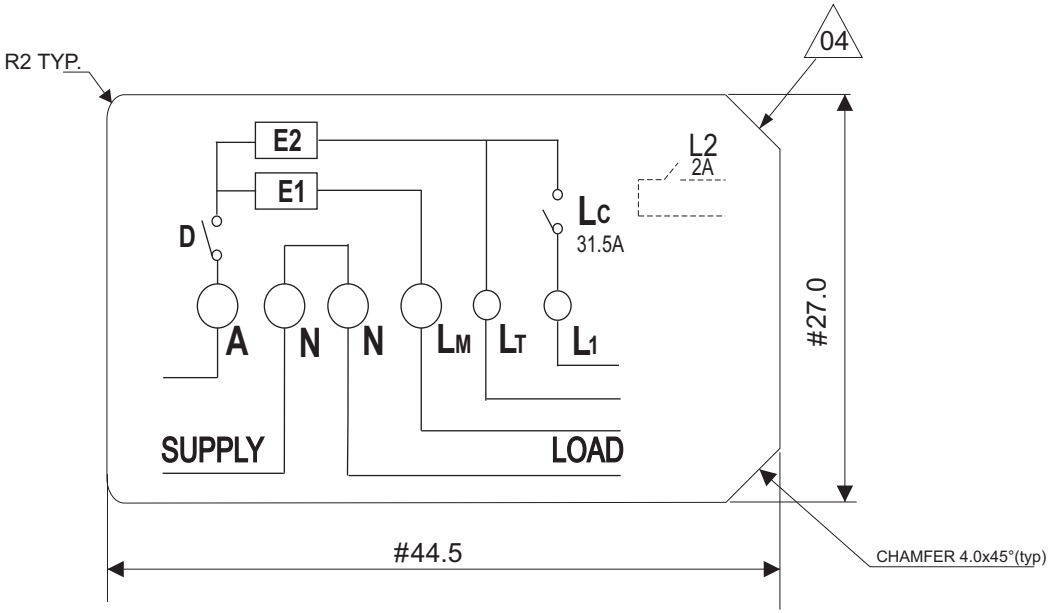

DIMENSION DETAILS

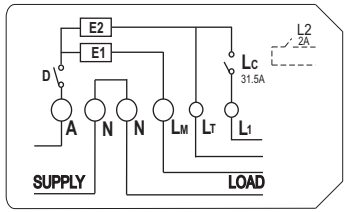

ARTWORK
(SCALE 1:1)

NOTES:-

#1- ADHEISVE : a) TRANSPARENT ADHESIVE (BIRLA 3M) ON PRINTING SIDE. & REMOVABLE WAX PAPER FOR EASY PEEL OFF.
b) TEXT TO BE PRINTED IN REVERSE PATTERN AS THE DECAL WILL BE PASTED ON THE OPAQUE TERMINAL BLOCK COVER

2- ADHESIVE MUST WITHSTAND HOT RUN TEST AT 80°C FOR 8 hrs.
3- PRINTING COLOR : BLACK.
4- OUTER BOUNDARY PRINTING NOT REQUIRED.
5- REFER SOFT FILE FOR ARTWORK.
6- ARTWORK TO BE APPROVED BY SML, PRIOR TO SUPPLY.
7- ALL DIMENSIONS & PARAMETERS MUST BE INSPECTED & REPORT SHOULD BE SUBMITTED WITH SUPPLY.
8- AFTER APPROVAL (#) MARKED DIMENSIONS / PARAMETERS MUST BE INSPECTED & REPORT SHOULD BE SUBMITTED WITH EVERY LOT SUPPLIED.
9- GENERAL TOLERANCE ±0.2mm.

RevNo.	Date	Revision History(ECR/ECO/DCO/DRN)	Drn.by	Chk.by	Appd.by
004	26.09.14	REFER" 04 " FOR MODIFICATION AGAINST ECO05841	Amit.D	HSN	AKK
003	11.07.14	REFER" 03 " FOR MODIFICATION AGAINST DCO28522	Amit.D	HSN	AKK
002	11.06.14	REFER" 02 " FOR MODIFICATION AGAINST DCO28093	Amit.D	HSN	RVH

Volume:-

Material No:- RWF-00014

Material Description:- #PVC film thickness 80±10 microns, color transparent, finish glossy

Finish:-

SH1 OF1

Title: Label for i-Credit 510 ; (connection diagram 2E, disconnect, LC and 2A relay)

Drg.no. BGD103-612

C.R.004

Size(Org.) A4 | Units: mm | Scale:

NPD-MEC-QF-26
RevNo.001

THIS DOCUMENT IS COPYRIGHT OF SECURE INTERNATIONAL HOLDINGS PTE. LTD. AND SHALL NOT BE DIVULGED, REVEALED, REPRODUCED, COPIED, IN WHOLE OR IN PART, NOR USED FOR ANY PURPOSE OTHER THAN FOR THE SUBMITTED. ASK IN CASE OF ANY DOUBT.

SECURE METERS LIMITED
Engineering Drawing